# DG series

## DG-12864-15 128 x 64 Dots

### ■Mechanical Data

| Item | Standard Value | Unit |
|---|---|---|
| Module Size | 75.0(W) x 52.7(H) x 6.8(T) | mm |
| Viewing Area | 60.0(W) x 32.5(H) | mm |
| Dot Pixels | 128 x 64 | dots |
| Dot Size | 0.4 x 0.4 | mm |
| Dot Pitch | 0.43 x 0.43 | mm |

### ■Absolute Maximum Ratings

| Item | Symbol | Standard Value | | | Unit |
|---|---|---|---|---|---|
| | | Min. | Typ. | Max. | |
| Supply Voltage for Logic | $V_{DD}$-$V_{SS}$ | 0 | -- | 7.0 | V |
| Supply Voltage for LCD Drive | $V_{DD}$-$V_{EE}$ | 0 | -- | 16.0 | V |
| Input Voltage | $V_I$ | $V_{SS}$ | -- | $V_{DD}$ | V |
| Operation Temperature | Topr | 0 | -- | 50 | °C |
| Storage Temperature | Tstg | -20 | -- | 70 | °C |

### ■Electrical Characteristics

| Item | Symbol | Condition | Standard Value | | | Unit |
|---|---|---|---|---|---|---|
| | | | Min. | Typ. | Max. | |
| LCD Supply Voltage | $V_{DD}$-$V_{SS}$ | -- | 4.5 | 5.0 | 5.5 | V |
| LCD Driver Circuit Power Supply Voltage | $V_{DD}$-$V_{EE}$ | 25°C | -- | 11.2 | -- | V |
| Input Voltage | $V_{IH}$ | NOTE(1) | 0.7 x $V_{DD}$ | -- | $V_{DD}$ | V |
| Input Voltage | $V_{IL}$ | NOTE(1) | $V_{SS}$ | -- | 0.3x$V_{DD}$ | V |
| Supply Current | $I_{DD}$ | $V_{DD}$ = 5.0V | -- | 2.0 | -- | mA |
| | $I_{LC}$ | $V_{LC}$=-8V | -- | 1.8 | -- | mA |

Note (1) Pin, E,RS,R/W,DB0~DB7

### ■Pin Assignment

| No. | Symbol | Level | Function |
|---|---|---|---|
| 1 | $V_{DD}$ | -- | Power Supply for Logic (+5V) |
| 2 | $V_{SS}$ | -- | GND(0V) |
| 3 | $V_{LC}$ | -- | LCD Drive Voltage(-8V) |
| 4~11 | DB0~DB7 | H/L | Data Bus Line |
| 12 | /CS1 | H | Chip Selection For IC1(U2) |
| 13 | /CS2 | H | Chip Selection For IC2(U3) |
| 14 | /RST | L | Reset |
| 15 | R/W | H/L | H: Data Read L: Data Write |
| 16 | D/I | H/L | H: Data Input L: Instruction Code Input |
| 17 | E | H,H-L | Enable Signal |
| 18 | FGND | -- | Frame GND (0V) |
| 19 | LEDA | -- | Power Supply for LED |
| 20 | LEDK | -- | Power Supply for LED |

### ■Block Diagram

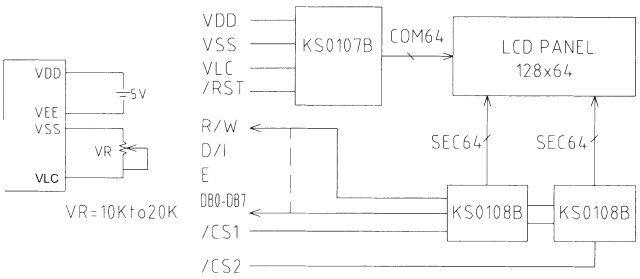


### ■External Dimensions

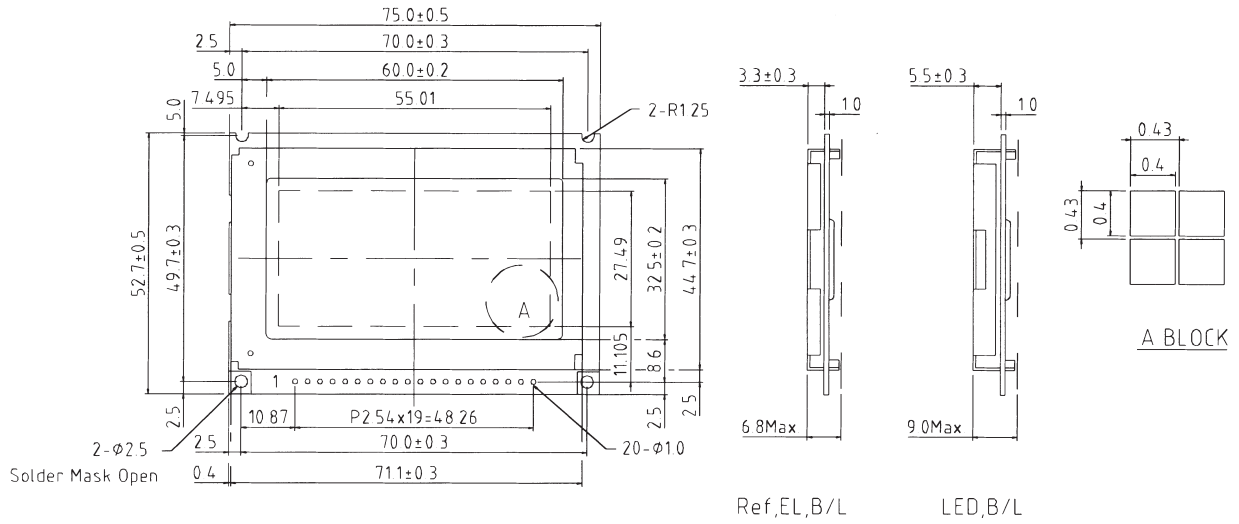


### ■Option

| LCD Type | | | | | | | | Backlight Type | | | | Built-in Control LSI |
|---|---|---|---|---|---|---|---|---|---|---|---|---|
| S1 | S2 | W | N | R | F | M | H | EL | LED | CCFL | Touch Panel | |
| • | • | • | • | • | • | • | • | • | • | | | KS-0108 |

Remarks: S1 : yellow-green STN LCD , S2 : gray STN LCD, W : black & white LCD, N : negative type LCD, R : reflective type LCD, F : transflective type LCD, M : transmissive type LCD, H : extended temperature type LCD (-20°C ~ 70°C)